REVISIONS				
ZONE	REV	DESCRIPTION	DATE	APPROVED

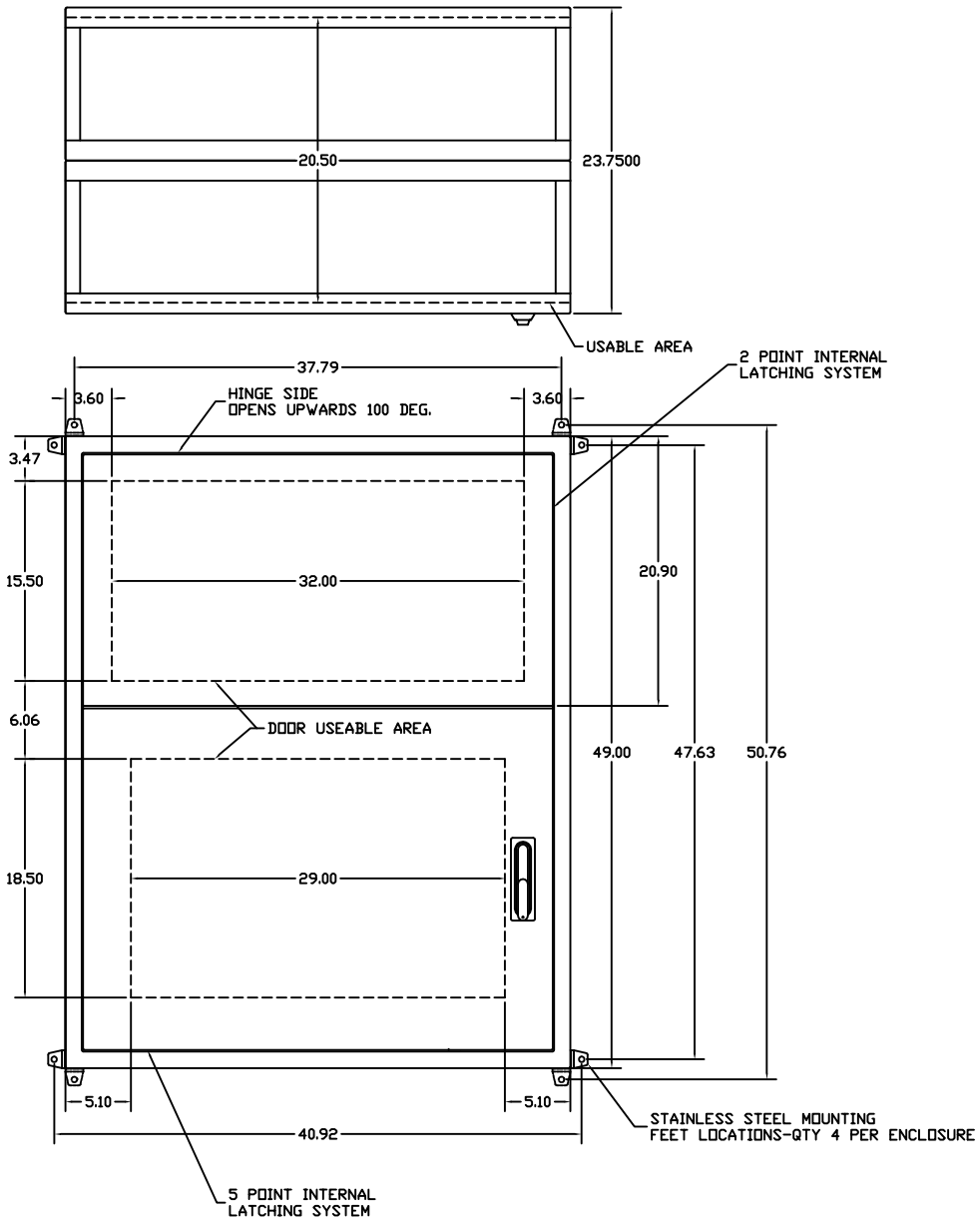

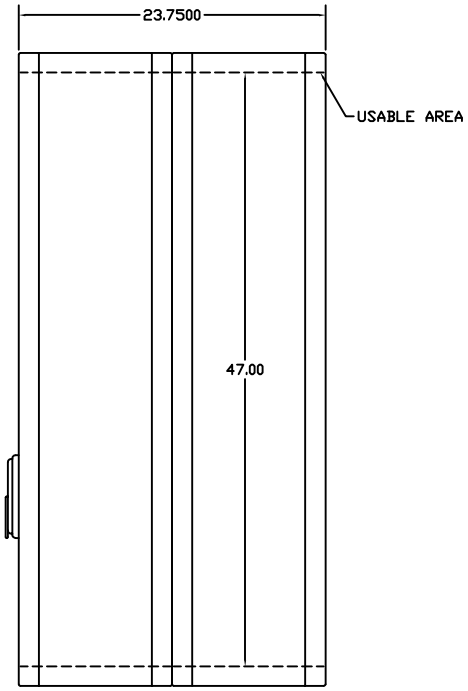

UNLESS OTHERWISE SPECIFIED:
DIMENSIONS ARE IN INCHES
TOLERANCES
DECIMALS
.XX ± .125 .XXX(± .005
.XXX ± .020
DO NOT SCALE DRAWING

THIS DRAWING IS THE CONFIDENTIAL AND PROPRIETARY PROPERTY OF VYNCKIER ENCLOSURE SYSTEMS, AND SHALL NOT BE REPRODUCED OR DISCLOSED TO OTHERS EXCEPT BY EXPRESS WRITTEN PERMISSION OF VYNCKIER ENCLOSURE SYSTEMS INC.

DRAWN B.J.S.	DATE 12/4/96	
CHECKED		
DESIGN		

VYNCKIER
ENCLOSURE SYSTEMS INC.

SUPERPOLYREL SERIES ENCLOSURE
VYNCKIER PART# SP5040/2EIA

SIZE	FSCM NO.	DWG NO.	REV
D		SP50402E1A	0

SCALE: FULL SHEET